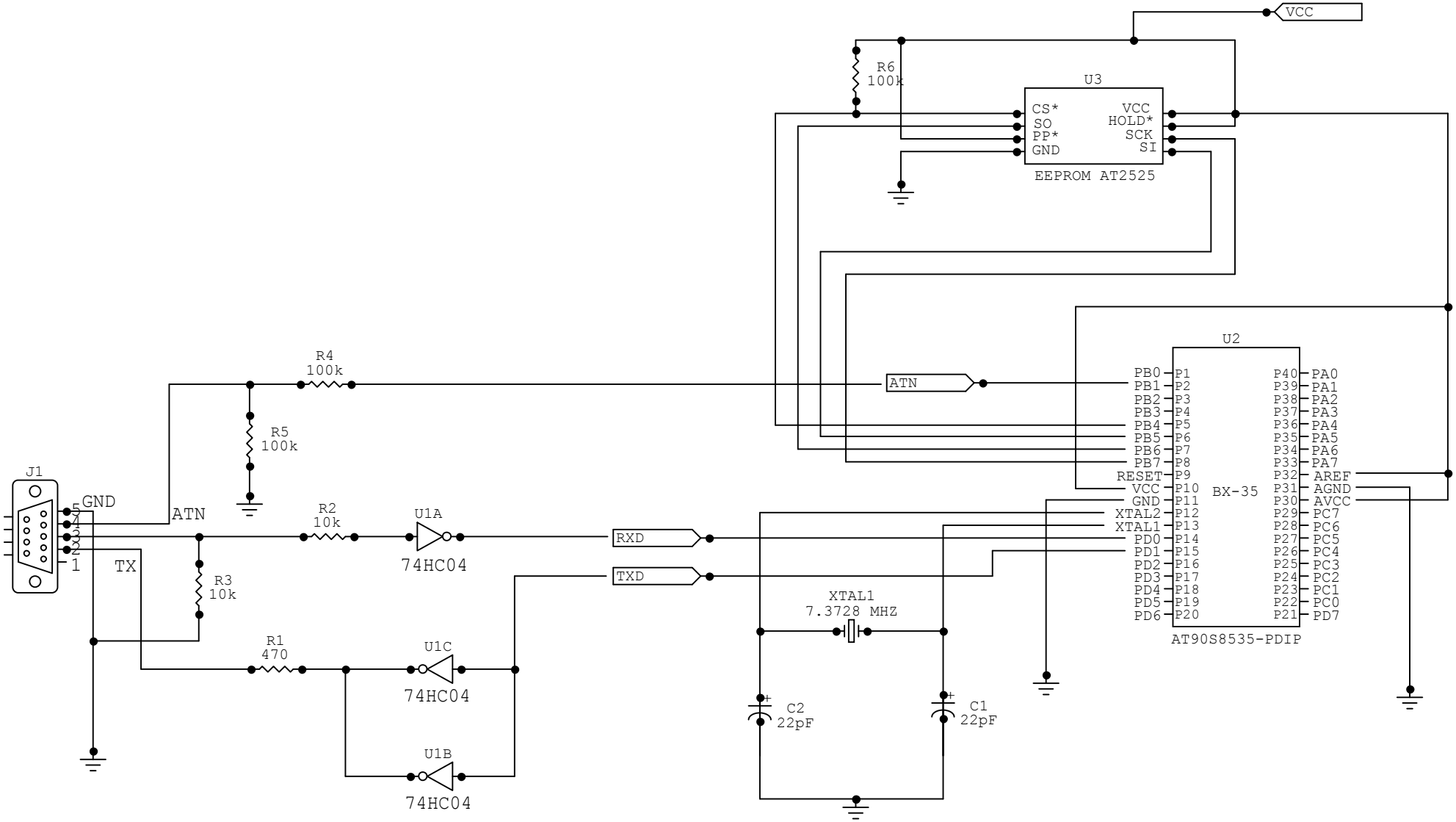
VCC
R6
100k
U3
CS*
SO
PP*
GND
VCC
HOLD*
SCK
SI
EEPROM AT2525
U2
R4
100k
ATN
PB0 P1
PB1 P2
PB2 P3
PB3 P4
PB4 P5
PB5 P6
PB6 P7
PB7 P8
RESET P9
VCC P10
GND P11
XTAL2 P12
XTAL1 P13
PD0 P14
PD1 P15
PD2 P16
PD3 P17
PD4 P18
PD5 P19
PD6 P20
P40 PA0
P39 PA1
P38 PA2
P37 PA3
P36 PA4
P35 PA5
P34 PA6
P33 PA7
P32 AREF
P31 AGND
P30 AVCC
P29 PC7
P28 PC6
P27 PC5
P26 PC4
P25 PC3
P24 PC2
P23 PC1
P22 PC0
P21 PD7
BX-35
AT90S8535-PDIP
R5
100k
J1
GND
5
4
3
2
1
ATN
TX
R2
10k
U1A
74HC04
RXD
TXD
R3
10k
R1
470
U1C
74HC04
U1B
74HC04
XTAL1
7.3728 MHZ
C2
22pF
C1
22pF